AlarmSuperStore.com

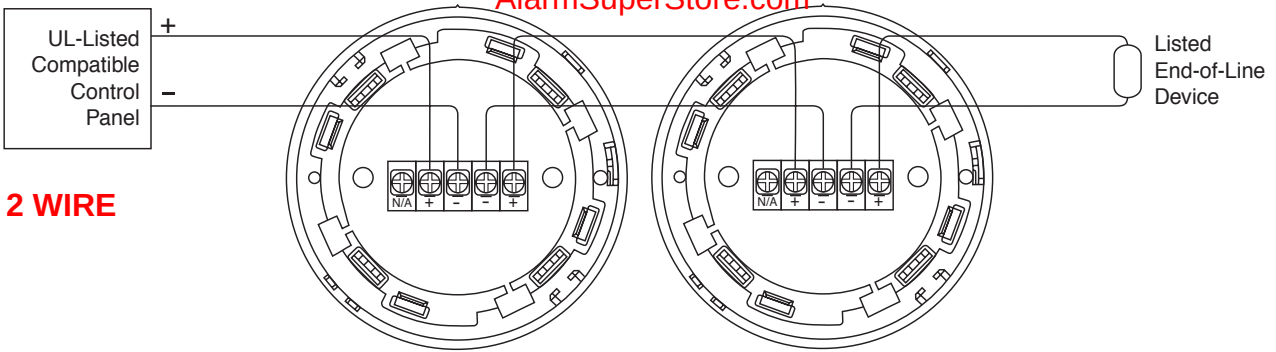

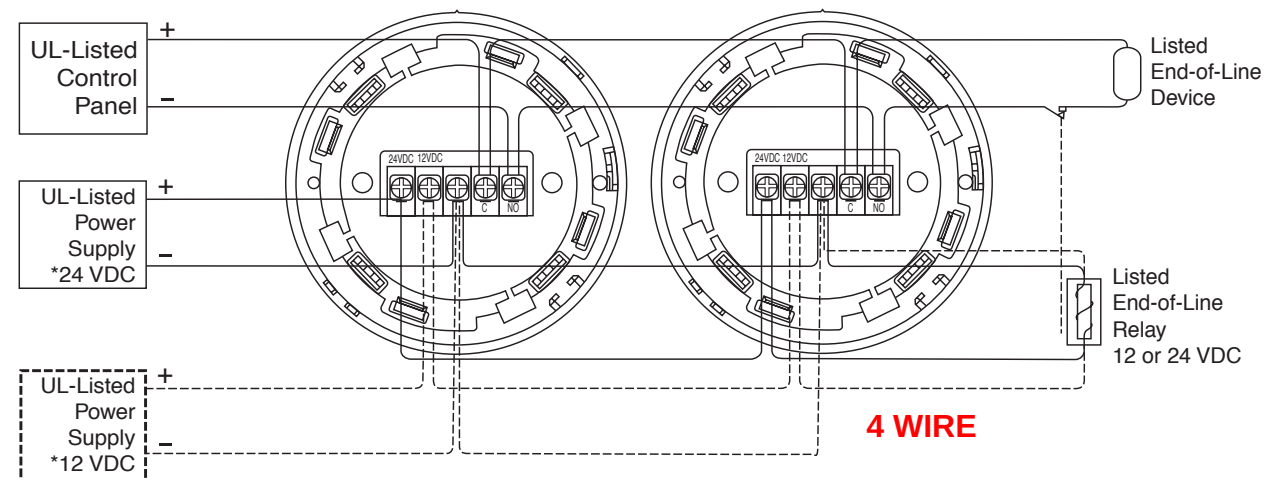

*Use either 12 VDC or 24 VDC. They cannot be used simultaneously.